THIS DRAWING IS UNPUBLISHED. RELEASED FOR PUBLICATION -.- .
© COPYRIGHT - BY TYCO ELECTRONICS CORPORATION. ALL RIGHTS RESERVED.

LOC	DIST
AF	50

REVISIONS

P	LTR	DESCRIPTION	DATE	DWN	APVD
	E	REDRAWN PER 0G3A-0739-00	29SEP00	JR	DD

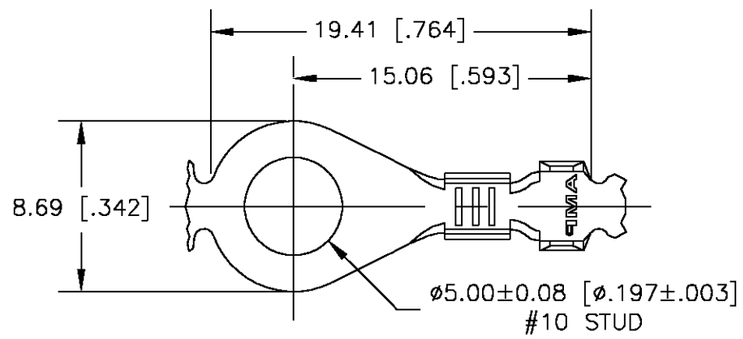

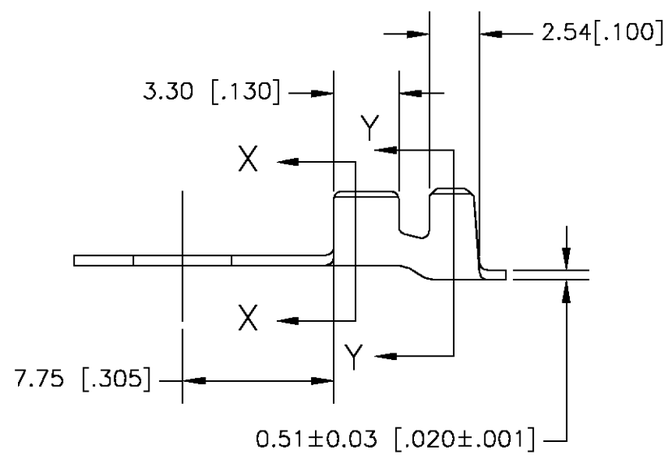

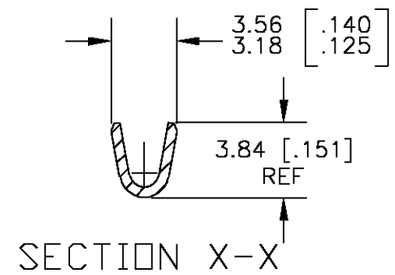

SECTION X-X

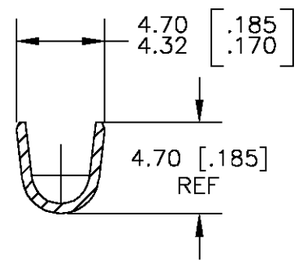

SECTION Y-Y

1 CONTINUOUS STRIP ON REELS

2 PARTS TO BE REELED WITH INTERLEAVE PAPER.

3 WIRE SIZE IS [#20-#16] AWG.

4 INSULATION RANGE IS 2.54-3.56 [.100-.140] DIA.

OBSOLETE	~~TIN~~	~~60394-2~~
	-	60394-1
	FINISH	PART NO.

THIS DRAWING IS A CONTROLLED DOCUMENT.

DIMENSIONS: mm [INCHES]

TOLERANCES UNLESS OTHERWISE SPECIFIED:

0 PLC	± -
1 PLC	± -
2 PLC	± 0.38[.015]
3 PLC	± -
4 PLC	± -
ANGLES	± -

MATERIAL H02 BRASS

FINISH SEE TABLE

DWN	JR RUTH	29SEP00
CHK	MS FEHER	29SEP00
APVD	D DECKER	29SEP00
PRODUCT SPEC	—	
APPLICATION SPEC	—	
WEIGHT	—	

AMP Tyco Electronics Corporation Harrisburg, PA 17105

NAME RING TONGUE

SIZE	CAGE CODE	DRAWING NO	RESTRICTED TO
A3	00779	C-60394	—

CUSTOMER DRAWING | SCALE 4:1 | SHEET 1 OF 1 | REV E

AMP 1470-19 REV 31MAR2000

11SEP00 3:00pm amp13469